GRAVIMIX®

GRAVIMETRIC BLENDER

MANUAL

FGB-EB/1 plug-in control

Ferlin Plastics Automation
Galileistraat 29
7701 SK Dedemsvaart
The Netherlands

Galileistraat 29
7701 SK Dedemsvaart
Nederland
Telefoon 0523-613439
Telefax 0523-616587

ENGLISH
Declaration of Conformity 98/37/EEG
We hereby declare, and assume full responsibility for this declaration, the product conforms to the following standards: EN 292/1/2, EN 414, EN 294, according to the previsions established by 98/37/EEG Regulations an subsequent modifications.

NEDERLANDS
Verklaring van overeenstemming 98/37/EEG
Hierbij verklaren wij met alle aansprakelijkheid van dien, dat het produkt overeenkomstig de volgende normen is vervaardigd: EN 292/1/2, EN 414, EN 294, op grond hetgeen is vereist in Richtlijn 98/37/EEG en de daarop volgende wijzigingen.

DEUTSCH
Konformitätserklärung 98/37/EEG
Hiermit erklären wir unter Übernahme der vollen Verantwortung für diese erklärung, daß das Produkt den folgenden Normen entspricht: EN 292/ 1/2, EN 414, EN 294, aufgrund der EG-Richtlinie 98/37/EEG und anschließender
Änderungen.

FRANÇAIS
Declaration de Confirmité 98/37/EEG
Nous déclarons, sous notre responsabilité pleine et entière, que le produit est conforme aux normes suivantes: EN 292/1/2, EN 414, EN 294, dans le respect des prescription fixées par la Directive 98/37/EEG et les modi- fications suivantes.

ESPAÑOL
Declaración de Conformidad 98/37/EEG
Declaramos, asumiéndonos las plena responsabilidad de esta declaración, que el producto responde a las siguientes normativas: EN 292/1/2, EN 414, EN 294, en base a las prescripciones establecidas por la Directiva 98/37/EEG y sucesivas modificaciones.

ITALIANO
Dichiarazione di Conformitá 98/37/EEG
Dichiariamo,assumendo la piena responsabilità di tale dichiarazione, che il prodotto è conforme alle seguenti normative: EN 292/1/2, EN 414, EN 294, in base alle prescrizioni stabilite dalla Direttiva 98/37/EEG e successive modifiche.

PORTOGUÊS
Declaracao de Conformidade 98/37/EEG
Declaramos, sob nossa compleda responsabilidade, que o produto està em conformidade com as seguintes normas: EN 292/1/2, EN 414, EN 294, com base nas prescriões estanelecidas pela Directiva 98/37/EEG e succesivas modificações.

DANSK
Overensstemmelserklæring 98/37/EEG
Vi erklærer på eget ansvar at følgende produkt opfylder følgende lovbelstemmelser: EN 292/1/2, EN 414, EN 294, i overensstemmelse med EU-direktiv 98/37/EEG inkl. senere ændringer.

SVENSKA
Försäkrar under eget ansvar att följande produkt uppfyller följande lagkrav: EN 292/1/2, EN 414, EN 294, i enlighet med EU-direktiv 98/37/EEG med ändringar.

NORSK
Kekreftelse om Overeenstemmelse 98/37/EEG
Vi forsikrer under eget ansvar at fölgende produkter opp-fyller fölgende lovmessige krav: EN 292/1/2, EN 414, EN 294, i samsvar med EU-direktiv 98/37/EEG med endringer.

SUOMI
Yhdenmukaisuusvkuutus 98/37/EEG
Vakuutamme omalla vastuullamme, etta allamainittu tuote täyttävät sueraavat lainmukaiset vaatimukset: EN 292/1 /2, EN 414, EN 294, EU-direktiivin 98/37/EEG ja muutoksien mukaisesti.

Machine: Maschine: Machine: Machine: La macchina: Maskine:	Model: GRAVIMIX Type: Serialnumber:

Dedemsvaart, 2014

Signature

Name & Function

H.D.J. Wennemars
Director

CONTENTS

Chapter Page

Encl. electric diagrams

1 INTRODUCTION

When precision and quality comes in first place.
In the modern plastics processing industry with constantly rising quality demands and the necessity of cost reduction require efficient, high-precision dispensing and blending of materials for all applications.
GRAVIMIX doses all material components gravimetrically, exactly to the programmed recipe. In this way, fluctuations in bulk density, changes in particle size, or changes in the flow properties have no effect on the dispensing accuracy. The GRAVIMIX records the exact usage of materials, allowing for a precise calculation of the production costs. The simple operation and self-calibration of the system guarantee fast recipe and material changes, even during night or weekend shifts when few personnel are present.

Due to these features, GRAVIMIX is particularly suitable for use in the following applications: Injection-moulding, Extrusion, Blow-moulding and Central-blending.
Due to the high, consistent dispensing accuracy of GRAVIMIX, the additive percentage can be reduced to lower tolerance limits without rejects or a loss in quality. The resulting savings in additives lead to a direct reduction in production costs.

Further advantage of GRAVIMIX:
- direct entry of the desired percentages of all components, even during operation
- gravimetric recording of individual and total throughput
- continuous monitoring of dispensing process
- constantly updated display of actual and desired setpoints
- monitoring of manufacturing process due to event and time journals
- fast, simple material changes due to self-calibration of the system
- reduction in downtime due to very simple, fast set-up
- savings in material due to precise gain-in-weight dispensing
- individual regrind processing due to adjustable regrind priority circuit

The compact and modular construction allows for problem-free adaption and expansion of the system, as required. All parts, which are in contact with the materials, are made of wear resistant, stainless steel. Refill systems are generally mounted directly to the dispensing hoppers, without additional support frames. With up to 10 stations, throughputs of a maximum of 2500 kg/h can be achieved. In the process, up to four stations and for larger systems up to eight stations with slide valves are used for the free-flowing components. In addition, one to two precision screw feeders can be used for small quantities of additives, which are free flowing.

Due to the self-calibration of the system, the sample dispensing of new material required with volumetric devices is no longer necessary. In case of a change in colour or material, the device can be taken apart and cleaned without tools in a very short period of time. GRAVIMIX can be mounted or installed on, above, or even next to the processing machine. Also the use of larger systems as central-blender for the simultaneous supply of several processing machines is possible.

The components are dosed one after the other and weighed in a weighing container. If all components have been added precisely to the recipe, they will be mixed homogeneously in the separate mixing chamber. From there, the mixture is conveyed directly to the processing machine or deposited in a vacuum take-off box.
The high dispensing accuracy with which GRAVIMIX works is based on the most modern weighing and control technology and proven application-specific software. The microprocessor controlled closed-loop control system constantly monitors all dispensing and weighing functions. The first signs of any deviations are recognised and compensated immediately. The optimised material feed system is unaffected by the height of the material in the feed hopper. GRAVIMIX achieves a total dispensing accuracy up to ± 0,1 %. This also applies to small quantities and extreme dispensing conditions.

GRAVIMIX-controls demonstrate how easy it is to operate a gravimetric blending system in spite of high technical standard. The desired component ratio or percentages are directly entered and can even be changed during operation.

Features of GRAVIMIX-controls:
- microprocessor- or computercontrol
- easy operating through simple entering
- menu-driven operation
- storage of components and recipes
- different languages on the display
- password protection for unauthorised access
- gravimetric / volumetric mode
- printing of used materials and data
- adjustable regrind processing
- additive to regrind control
- operating several systems from one control

2 CONTROLS

When all components are available the dispense of a batch starts. The cycle begins with closing the weigh-pan. Then each of the requested components is dispensed and weighed in the weigh-pan. When all the components of the recipe are correctly weighed, the blend is discharged into the mixing-chamber. A horizontal mixer mixes the components to a uniform blend, which discharges to a storage bin, or directly into the machine hopper.

2.1 Blender start-up

In this section is a short description of the normal start-up action of the blending system. More details of the controls are described in the following sections. **A emergency stop can be made by turning the machine off with the button on the control box, like on the drawing 3.1.1 in chapter 3.**

Steps to follow for the start-up of the blending system:

[1] Plug the communication cable into the user-interface and control box on the blender.
[2] Connect air pressure to the blender and turn it on, **6 bar** is recommended.
[3] Turn on the power. On the user-interface and control-box.
[4] Make a recipe with select recipe.
[5] Confirm with Accept
[6] Be sure there is no alarm active.
[7] Start the blender, press the green start button.

The blender will now operate automatically on the recipe you made.

2.2 Blender status

The control of the blender is based on a number of status. Each status gives an exact description in which situation the controller is. The controller knows the following status:

Inactive
At the start-up of the blender several internal tests will be done automatically if the controller can't find a recipe. In this status the blender will not start until a recipe is edited.

Standby
The blender is complete in rest but can be started any moment by giving the start-command. In this status recipes, parameters and debug-commands can be sent to the controller.

Profibus
The machine is controlled through a SCADA bundle or a PLC control. In this case the Plug-in control can only be used for monitors. By releasing the control through Profibus the control can be used for local control again.

Operating
The blender will now produce a blend for the selected recipe.

Stop requested
The blender is operating but has received a stop-command. The stop-command will be executed at the end of a batch-cycle. This status will be replaced automatically with 'standby' if nothing is done. If a start-command is given during the status 'stop requested' the status will be 'operate' again.

Error
The controller has detected an error and therefore the system will stop. In a sub-menu at the operator-interface the error will be displayed. The error situation can be recovered using the □ command. The error should be solved then.

2.2.1 Operation Local / Remote

The operation of a Gravimix can happen in different ways. An industrial PC (standard control) or a plug-in control can be used. Also a combination of both is possible. To avoid any conflicts and to exclude unexpected situations, a certain protocol is used while operating with more than one control. Through the recipe status the protocol with which the machine operates is made visible to the operator.
Below the explanation of the different status.

Local

Local is reflected in the menu “change recipe”. When the machine operates on local it is possible to make a new recipe in the menu “change recipe”. This new recipe will be stored in the standard control under recipe number 0 in case of a combined operation.

Remote

Remote is reflected in the menu “change recipe”. The machine is operated with more than one control. The standard control sends the recipes. Only percentages can be adjusted in the recipe, also in specific menu’s the access rights have expired. Only through the standard control now those orders can be carried out of which the access rights were denied.

2.3 Production-modes

The production-mode of the blender indicates how the production will stop in automatic-mode. This parameter can be changed using the menu *public parameters*. The production-mode has three options:

Continue

The blender will not stop automatically after the start-command. The blender will continue the production, unless the blender runs out of material or an error occurs.

Alarm-Weight

If 'Alarm-Weight' has been chosen, a requested weight has to be given. After a start the requested weight will be compared with 'produced-weight'. If both are the same or the 'produced-weight' higher, the controller will send an alarm to the operator-interface. The production will continue.

The alarm can be recovered setting the 'produced-weight' to zero (0). This reset command is part of the production status. Go to totals and reset.

Weight->Error

When using the option 'Weight->Error' a weight has to be given. After a start the requested weight will be compared with 'produced-weight'. If both are the same or the 'produced-weight' higher, the controller will send an error to the operator-interface. The production will not continue in this case.

2.4 Mixer-mode

When all components are dispensed, the contents of the weighbin will be emptied. The mixer in the mixing chamber, which contains the dispensed components, can be put in different modes. Choose the menu *public parameters*.

Normal

The mixer is off during production. If the components are dumped from the weighbin into the mixer chamber the mixer will be on for a predefined number of seconds, defined by 'mixerOnTime'. This parameter can only be changed if this option is chosen.

Pulsing

The mixer will pulse during production. Both on- and off-time can be defined by using the parameters mixerPulseOnTime (time on) and mixerPulseOffTime (time off). These parameters can only be changed if this option is chosen.

Off

The mixer is always off.

On

The mixer is on, during the production.

2.5 Dispense modes

The blender has two ways of dispensing: gravimetric and volumetric. One mode can be selected or a combination of both. This can be defined choosing menu *public parameters*.

Gravimetric

All component of the batch are dispensed and measured separately. Gravimetric is more accurate than volumetric, but takes more production time, i.e., lower output.

Volumetric

All components of the batch are dispensed at the same time using the dispense time of each component (calculated by the system). The components are dumped directly in the mixer chamber. No measurement is done in this mode. Therefore this method is less accurate, but the production time is faster, i.e., maximum output

Combination

When combination is defined, one gravimetric will be followed by a defined number of volumetric dispenses. This is defined by the parameter combinationRatio. This parameter can only be defined if 'combination' is chosen. This mode has the best of gravimetric and volumetric.

Use: normally the defined combination will be done (ex. 1:3). However, if the mixer chamber is full, the process will automatically do a gravimetric dispense instead of a (possible) volumetric one.

2.6 Batch handling

2.6.1 Production control

After a start-command the controller will calculate the requested weights of all components of the selected recipe.

2.6.2 Recipe to weight calculation

A recipe can be defined in two ways: 'Standard'(R,N,A) and 'Percentage'(P). These methods can be defined in the recipe choosing menu *select recipe*. The methods 'Standard' and 'Percentage' define the relation of the components (Regrind, Natural and Additive) in a recipe.

2.6.2.1 Standard Method

The different components are defined as follows:

(REG)Regrind	: Percentage of the batch weight
(NAT)Natural	: Relation between other naturals
(ADD)Additive	: Percentage of the totals of all naturals

Example

Batchweight	2000.0 gr.
Regrind	20.0%
Natural 1	4
Natural 2	1
Additive	5.0%

Regrind: 20.0% of 2000.0 gr.		400.0
Naturals: naturals + additive = 80.0%		
naturals + (0,05 * naturals) = 80.0%		
naturals = 80.0/1.05 = 76.2%		
natural 1 = 4/5 * 76.2 = 61.0%		1220.0
natural 2 = 1/5 * 76.2 = 15.2%		304.0
Additive: 80.0 - 61.0 - 15.2 = 3,8%		76.0

	TOTAL	2000.0

2.6.2.2 Percentage Method

The different component are defined as follows:

(REG)Regrind : Percentage of the batch weight
(NAT)Naturel : Percentage of the batch weight
(ADD)Additief : Percentage of the batch weight

Total sum must be 100%.

Example

Batchweight	2000 gr.
(REG) Regrind	20.0%
(NAT Naturel 1	60.0%
(NAT Naturel 2	15.0%
(ADD) Additive	5.0%

(REG) Regrind:	20.0% of 2000.0		400.0
(NAT) Naturel 1:	60.0% of 2000.0		1200.0
(NAT) Naturel 2:	15.0% of 2000.0		300.0
(ADD) Additive:	5.0% of 2000.0		100.0

		TOTAL	2000.0

2.6.3 Dispensing

Dispensing of the different components will start after the calculation of the related weights.
The components are dispensed in the order as defined in the recipe (gravimetric only). In volumetric mode all components are dispensed at the same time.

Every mechanical valve has a reaction time. The controller uses the 'Hardware Reaction Time' to calculate the time which the dispense valve must be activated. The 'Hardware Reaction Time' is the maximum active time of the valve when no material is dispensed. The controller uses a pulse of 5ms in the following algorithm:

OpenTime = Weight [g] / dipenseSpeed [g/s]

OpenPulses = (OpenTime [s] / 0.005 [s]) + HardwareReactionTime [Puls]

To dose small quantities, the machine will switch automatically to pulse dispension. This means that the slide valve every time during the dispense opens for set times, which are adjusted in the menu *calibration -> hardware reaction time* and will close for a set time (off). Pulse dispension will only work if there is a dispension under the regulated weight (W) in the menu *calibration -> hardware reaction time*. It is adaptable for every hopper.

After every dispense cycle the weight is measured. The weight bin must be stable before the weight can be measured, therefore a time delay is inserted between dispense and measuring. When the controller starts measuring the signal must be stable for at least 1 sec. (signal within the 'Weighbin-variationband')

After measuring the weight of the first dispense some calculations can be done and with the results parameters can be changed. Result is a more accurate next dispense. After the first dispense of a material one of the following situation occurs:

Dispense is correct

The difference between calculated- and measured weight is less then the dispense accuracy. In this case extra dispense tries of this material are not necessary.

Dispense not correct (too little)

The difference between calculated and measured weight is more than the dispense accuracy but there is less dispensed (measured) than calculated. In this case the controller reacts according to the chosen 'alarm-type'. The following 'alarm-types' are possible:

IGNORE No extra dispense-tries. Relations within the recipe will corrected by re-calculations.

WARNING The controller tries to reach the dispense-accuracy by extra dispenses. The extra dispenses are limited by the parameter 'dispenseTry'. When after a maximum number of dispense tries, the accuracy is not reached the controller sends a warning only to the user (= The controller continues with the next material).

ERROR The reaction of the controller is equal to 'WARNING' only an error is sent to the user when the accuracy is not reached. Now the controller waits for a start-command to initiate new dispense tries of the same material. This process goes on until the dispense accuracy is reached.

Dispense not correct (too much)

Too much material has been dispensed so there is nothing the controller can do. Of course the relations within the recipe will corrected by re-calculations.

After the first dispense try in all of the above mentioned cases a new dispense rate will be calculated. If the measured dispenserate (measured weight / dispense time) differs from the used dispenserate a correction can be made. A correction is only made if the difference between the measured- and used dipenserate is less then the boundary (dispenseRateVarBand). This method prevents the controller calculating incorrect values e.g. if a hopper runs out of material. The new dispenserate is calculated by the next algorithm:

dispenseRate = ((4 * dispenseRate) + (measuredWeight/dispenseTime))/5

Is there an unusual value, the dispenserate is calculated by the following algorithm:

DispenseRate= ((9 * dispenseRate) + (measuredWeight/dispenseTime))/10

When all components of a recipe are dispensed the content of the weighbin is dumped in to the mixer chamber. The weighbin dumps the material by opening a valve for a given time. This time (weighbinDumpTime) is a parameter, which can be changed. It is also possible to start the mixer at this time (see mixer-mode). There are two conditions for opening the weighbin valve:

Condition 1. The mixbin-vale may not be open (if present)

Dispensed material must be mixed first before it can be used. Therefore the mixbin-valve and weighbin-valve may not be open at the same time.

Condition 2. The mixerchamber may not be full

If the input-device indicates a full mixerchamber no material may be dumped into it (it is full)

2.6.4 Calculations

In order to be able to dispense with high accuracy, the actual measured weights will be used to recalculate the requested weight of the next component. The dispense will be optimised if possible in order to guarantee a good batch (good relation).

IMPORTANT

Best dispense order is:

Regrind, Natural, Additive

2.7 Datalogging

Some production data is stored. This is shown at the user interface.

* Batch data
  - measured weight (each component)
  - dispenserate of each component
  - recalculation to recipe
  - share in the batch of each component

* Total data
  - Sum of dispensed weight per hopper
  - Percentage of the dispensed weight
  - Sum of the produced weight after reset
  - Sum of the produced weight

* General
  - throughput per hour
  - number of cycles

The controller saves all data in battery-backup memory. This means that the power supply, during a power loss, will be taken over by the battery

3 USER INTERFACE

3.1 Operator-interface

The machine can be controlled by using the control box. The control can be placed near the machine or in a control-space. The maximum distance between machine and control is 25 meter.

3.1.1 Keyboard

On the terminal of the FGB is a keypath with 6 buttons.

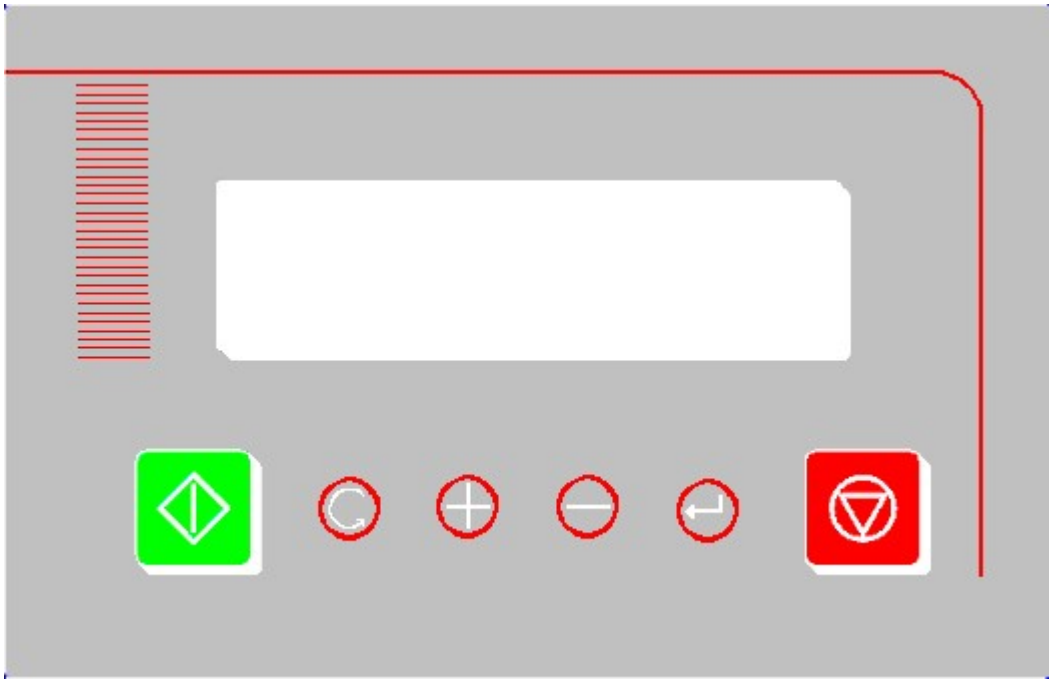

 - Start

 - Scroll

 - Increase

 - Decrease

 - Enter/recover

 - Stop

3.1.2 User control

The user-interface consists of several screens, which can be selected by a menu. A screen consists of objects. Only one object in a screen is active (selected). By using the ◎ key(scroll) the actual selected object can be changed.

Button
After activating the button a command (or set of commands) is (are) executed. The name of the button represents the functionality of the button.

Number input field
When a number input field is selected it can be activated by + or -. The activated input field shows a cursor at the position where the next number will be placed. To deactivate (leave) the input field use one of the following keys ◎, menu, ↵.

3.2 Recipes

Recipe constitutes the core of the controller. They contain all information about the material to be produced. By the menu *select recipe* it is possible to add a recipe to the controller.

3.2.1 Add/change recipes

The terminal has the capacity for 1 recipe.

```
H#:     REC    TYPE   ALARM                GR/S    GR/PLS
1       20.0   REG    WARNING              800     0.50
2       1.0    NAT    ERROR                1000    0.50
3       1.0    NAT    ERROR                1000    0.50
4       3.0    ADD    ERROR                100     0.50
5       5.0    ADD    ERROR                15      0.50
BATCH: 2000 gr                     INTERPRETATION: STANDARD
MENU                  OK                           [LOCAL]
```

All fields of the recipe are visible in the screen. By selecting the objects with the ◎-key it is possible to change them. Below a list is given with every field of the recipe giving some extra information about the field.

FIELDS OF A RECIPE		
Column	Indication	Description
H#	1 to 12	Hopper number 1 to 12
REC	0.0 - 100	Percentage input and/or ratio to different Naturals (§2.6.2)
TYPE	REG, NAT, ADD	Type of material (§2.6.2) what is in the hopper.
ALARM	IGNORE, WARNING, ERROR	Type of alarm (§2.6.3) for the hopper involved.
GR/S	g/s	Rate of material
GR/PLS	Gr/pls	Rate of material during pulse dispension
BATCH	100-25000 gr.	Total weight of the batch
INTERPRETATION	STANDARD PERCENTAGE	Adaptation components compared to eachother (§2.6.2.1) Division components compared to batch (§2.6.2.2)

If all fields are provided with data, the screen can be left through ◎, menu, ↵. If the values are not entered correctly, at that moment the recipe can not be changed. The cursor will automatically go to menu.

Examples of entering recipes

Target: Changing recipe.

Actions:

Action: ◎ key -> menu -> change recipe -> ↵ key
◎ key and ↵ key select desired hopper
◎ key column and **+/-** key select column and change with **+** or **–** adjustment.

3.2.2 Select Recipe

When an operator wishes to produce a new product a change of the current recipe must be done. To change the current recipe select menu *select recipe*.

IMPORTANT

When a new recipe is selected be sure that all hoppers are filled with material. The controller calculates new dispense-rates by a fast algorithm in the first 5 batches.

3.3 Timely information

It is possible to get an overview of one of the connected controllers. Therefore two screens are available on the terminal: production-screen and material usage-screen.

3.3.1 Production screen

The production-screen can be reached by selecting menu *production status*. The production-screen displays information about the current controller. The information on the screen is updated every 3 sec.

H#	REC	REQ(GR)	RES(GR)	TOTAL(KG)	%
1	20.0 R	400	398	200,0	20.0
2	01.0 N	1523	1525	761,5	1.0
3	05.0 A	76	76	38,5	5.0
standby			0 g	0.0	

COLUMN	Description
H#	Hopper number 1 to 12
REC	Original recipe
REQ	Required weight during dispension (gr)
RES	Dosed weight of the last dispension (gr)
TOTAL	Totally dosed weight (Kg)
%	Percentage in the total weight

3.3.2 Material usage screen

The material usage screen menu *Miscellaneous / material usage* displays the total quantity of material witch is used ordered by hopper number. The quantities, which are stored, doesn't depend on the current recipe. The material usage screen is erased from memory by one of the following actions:

* Command given by the operator

This is possible by using reset and selecting the option you require and pressing ↵.

Other values, which are stored in the material usage screen, are: date of the last erase-action, number of batch-cycles and production speed (kg/hour).

3.4 Adjustment of the gravimetric blender

3.4.1 Calibration of the weigh bin

The controller uses two known (entered) calibration-points to calculate a weighline. The controller uses this line to find a weight by every input-signal. The two calibration-points must be entered by the operator by the menu *calibration / calibrate*.

The calibration-procedure of the loadcell has two steps. Extra information is given to the operator by every step. This information is displayed on the screen. First be sure that the weighbin is empty and press zero. The weight of the empty weighbin is measured and stored by the controller. Next step is to fill the weighbin with a reference-weight and be sure that the input field on the terminal has the same value. Now press weight and the second calibration-point is measured and stored. The calibration-procedure is now ready.

IMPORTANT

The second calibration-point must be greater then the first one.

3.4.2 Tare of the weighbin

Due to temperature, age, overload etc. it is possible that the weighline of the controller 'moves'. When the line has moved a zero-weight will be displayed that isn't zero. To move the weightline back it is possible to start a new calibration procedure. But the calibration-procedure takes a lot of time and the weightline is correct (it only moved). The tare-function moves the line back to its zero-point. To start the tare function enter menu *calibration / Tare / Tare*.

3.4.3 Hardware reaction time

The control uses several pulses to control the dispensing valves and dispensing screws (one pulse can be compared with 5ms) The reaction time of the valve and screw however is larger. Therefore there is a minimal reaction time for the valves and screws. This time will be added to the calculated time so that failures caused by mechanical slowness will be eliminated. That this failure can be considerably appears in the following calculation:

Dispensing without hardware reaction time (assumed 6 pulses = 30ms)						
Dispensing	Dispensing speed	Desired	Dispensing time	Dispensing time excl hrt	Really	Abnormality
Screw	7 g/s	14 g	2 sec	1,97 sec	13,79 g	1,5 %
Valve	800 g/s	600 g	0,75 sec	0,72 sec	576 g	4 %

Dispensing with hardware reaction time(assumed 6 pulse = 30ms)						
Dispensing	Dispensing speed	Desired	Dispensing time	Dispensing time excl hrt	Really	Abnormality
Screw	7 g/s	14 g	2 sec	1,97 + 0,03 = 2 sec	14 g	0 %
Valve	800 g/s	600 g	0,75 sec	0,72 + 0,03 = 0,75 sec	600 g	0 %

The adjustment of the hardware reaction time is through *menu -> calibration -> hardware reaction time*

To change a value a complete row has to be selected through *edit ->* ◎ *key -> enter.*
After a value has been changed automatically a T appears behind the changed value. By selecting this value through *enter* the exit can be tested. Following will give an explanation per column.

H#	Pulse	T[S]	On[S]	Off[S]	W[gr]	T#
1	4	0.020	0.030	0.050	10.00	1
2	4	0.020	0.030	0.050	10.00	1
3	4	0.020	0.030	0.050	10.00	1
4	4	0.020	0.030	0.050	10.00	1
5	4	0.020	0.030	0.050	10.00	1
6	4	0.020	0.030	0.050	10.00	1
	Menu	Edit				

H#
Dispensing hopper number

Pulse
The hardware reaction time is expressed in pulses of 0.05 seconds

Time
The reaction time in seconds

With *test* "T" the value can be tested

The hardware reaction time has been set by the manufacturer on the right value for normal use. These values are:
- Hopper with valve : 4 pulses
- Hopper with dispensing motor : 2 pulses

3.4.4 Pulse dispensing

To achieve a higher accuracy with the dispensing of small quantities with a dispensing valve, "pulse dispensing" can be chosen. This is possible until a certain weight, which can be adjusted. It will be at the expense of the maximum throughput capacity. The adjustment of the pulse time is *menu -> calibration -> hardware reaction time*. The screen consists of different columns, the following will give an explanation per column. To change a value a whole row should be selected edit -> ◎ *key -> enter* ↵

The dump speed of pulse dispensing has to be ± 0.5g per pulse. The adjustment for the dumping speed is highly dependent on the used material, this is why the times must be adjusted manually. This is as follows:

Put the machine on manual control *menu -> select manual control*. Close the weigh bin in the menu *I/O monitor*, note the actual weight in the menu *tare* and select in the menu *hardware reaction time* which hopper has got to be tested. After a value has been changed press on **T** so that there is one test pulse. Check the weight increase through the menu *tare*. By making the "on time" (0.010 – 0.040 sec.) longer or shorter, more or less material will fall out of the hopper. The "off time" (0.050 – 0.300 sec.) will give the material more time to fall from the hopper on to the valve, the "of time" should not be too short. After one test pulse gives a good result, more pulses should be tested (max. 10 pulses) to check if the average is also good. <u>After this put the machine back on the automatic control.</u>

H#
Hopper number

<u>ON[s]</u>
Time the valve is open per pulse

Off[S]
Time before a next pulse is executed

<u>W[gr]</u>
If the dispensing quantity is beneath the weight entered here, it will be switched over to pulse dispensing.

Test pulse
The number of pulses that will be given to test the pulse dispensing manually. Through the test *"T"* manually can be tested if the adjusted times are sufficient enough to dose.

3.4.5 Digital Input & Output monitor

The input & output monitor *menu -> digital I/O monitor* will give a statement of all outgoing (outputs) and incoming (inputs) signals in the control. The outputs can be activated manually. **This only is possible in machine mode: manual control.** On the screen the outputs can be activated through "**+**" and can be turned off through "**-**".

3.4.6 Automatic control

The control knows two modes, namely: **Automatic control** and **Manual control**. The operator can change the mode through the menu. It is only possible to change the mode if the machine status is "standby".

When a control is adjusted on automatic control through **menu -> choose automatic control** a recipe is dosed without help from an operator. This adjustment is used for continuously production.

3.4.7 Manual control

The control knows two modes, namely: **Automatic control** and **Manual control**. The operator can change the mode through the menu. It is only possible to change the mode if the machine status is "standby".

After a start-command in manual control one dose is carried out after which the machine-status will return to "standby" through **menu -> choose manual control**, manual control is chosen. All outputs can be controlled in this menu manually with "+" and "-".

3.5 Overview of parameters

The controller has a great number of parameters. The parameters are necessary to control the machine with all its features. The parameters are broken down into two groups; public-parameters and protected-parameters. Free parameters may be changed by an operator and protected parameters may only be changed if the password is given.

3.5.1 Public parameters

Below a list is given of all parameters with are attainable by the menu *public parameters*.

PUBLIC PARAMETERS		
Parameter	Description	Init
ProductionMode	Actual production-mode. There are three possible modes; CONTINUE, WEIGHT and ALARM_WEIGHT. If the mode WEIGHT os ALARM_WEIGHT has been selected the parameter productionWeight must also be given.	CONTINUE
ProductionWeight	The FGB stops his production when the productionWeight is reached. (productionMode must be WEIGHT or ALARM_WEIGHT).	100 [Kg]
DispenseMode	Actual dispense-mode. There are three possible modes; GRAVIMETRIC, VOLUMETRIC and COMBINATION. If the mode COMBINATION is chosen the parameter combinationRatio must be given.	GRAVIMETRIC
CombinationRatio	Relation between the volumetric and gravimetric dispenses. (one gravimetric dispense and x volumetric dispenses).	3
MixMode	Actual mixermode. There are four possible modes; ON, OFF, NORMAL and PULSE. In normal-mode the parameter mixerOnTime must be given. In the mode pulse the parameters mixerPulseOnTime and mixerPulseOffTime must be given.	PULSE
MixerOnTime	Time the mixer is activated after the material is dumped out of the weighbin.	10 [s]
MixerPulseOnTime	Time the mixer is activated in pulse-mode.	2 [s]
MixerPulseOffTime	Time the mixer is not activated in pulse-mode.	15 [s]
WeighbinDumpTime	Time the weighbin is activated (dumping of material into the mixerchamber).	5 [s]
LevelControlWaitTime	Time between the full signal of the mixerchamber sensor and opening the mixerchamber-valve.	8 [s]
LevelControlDumpTime	Time between the free signal of the mixerchamber sensor and closing the mixerchamber-valve.	1 [s]

3.5.2 Protected parameters

Below a list is given of all parameters with are attainable by the menu *protected parameters*.

PROTECTED PARAMETERS		
Parameter	Description	Init
LoadcellSettleTime	Time between the dispense of the last component and reading the weigbin-signal. (to eliminate vibrations).	1 [s] 2 [s] 10 + 25 kg
DispenseTry	Maximum number of tries per component to reach maximum accuracy	4
DispenseAccuracy	Minimum accuracy for each component.	15 [%]
DispenseRateCorrectionBand	Maximum deviation when a re-calculation of the dispense-speed is done	20 [%]
LoadcellOverload	Maximum weight in the weighbin. The controller initiates an error on this point.	3.0 [kg] *)
LoadcellWeightBandWidth	To read a correct weight 8 samples must fit to this absolute band.	10 [g]
Maximum tare variation	Maximal absolute abnormality of the zero point for the weighbin	40 [g] 100 [g] 10 + 25 kg

*) *Depends on the type of GRAVIMIX*

- *0,5 kg unit 0.8 kg*
- *1 kg unit 1.2 kg*
- *2 kg unit 3.0 kg*
- *5 kg unit 6.0 kg*
- *10 kg unit 12.0 kg*
- *25 kg unit 30.0 kg*

3.6 Settings of the user-interface

3.6.1 Change the rights of an operator

The terminal has some areas, which are protected by a password; protected-parameters and calibration. Before an operator can use, modify or see these areas he has to perform a login procedure. This procedure starts by choosing menu *login* in the production status, the controllers asks now for an ID (see below).

IMPORTANT

The standard code for the operator is 1111.
After changing the code the old code can not be used anymore. Please be sure to put the new code at a safe place. When you cannot remember the new code, please contact your supplier.

Logout automatically happens after 2 minutes when the terminal is not being touched.

3.6.2 Change ID code

By choosing menu -> *change ID code,* the operator can, after the login, change the code. Enter the new code followed by: "*ACKNOWLEDGE"*.

3.6.3 Change date and time

Date and time of the terminal can be changed by entering menu *system time*.

3.6.4 Revision code of the system

The terminal has the possibility to display the revision and those of the connected controllers. This information can be important for system-errors when you inform the dealer. To display this information chose menu *software revisions.*

3.6.5 Adjust contrast

The terminal has the possibility to adjust the backlight of the display, you chose *menu Miscellaneous / Adjust contrast* and in- or decrease the number of the percentage.

3.7 System

Through the menu adjustments the following items can be changed:

- Type of recipe change
- Overload alarm
- Weight in kg / pound
- Dispensing control

3.7.1. Type of recipe change

The controller can be set so that the recipe can be changed in the production status screen. This can be done during production. After changing the settings, the next batch will be dosed in the new ratio. The system will calibrate itself again after this has been completed.
In order to activate this option, it is necessary to set through *menu "Miscellaneous/Type of recipe change"* to "Yes". The recipe can now be changed whilst in "*Production Status".*

Only the components that have been set with a value in *menu "Select recipe"* can be changed. When defining the recipe through *menu 'Select recipe'* all components that need to be adjustable have to be given a value, all components with ratio "0" and which have no parameters will be ignored.
When "*Type of recipe change"* is activated, the recipe can be changed in the production status screen. To exclude a component simply set the value to "0". All changes should be confirmed with *'Accept'*.

IMPORTANT

When a new recipe is selected be sure that all hoppers are filled with material. The controller calculates new dispense-rates by a fast algorithm in the first 5 batches.

When *'Type of recipe change'* is but the user has not logged in, using the login code, the recipe can only be changed in the "*Production Status"* screen. To alter the master recipe the user must then login using the login code. If the user is not logged in then the only other functions available are start and stop.

3.7.2 Overload alarm

After overloading a component there is an alarm, depending on the chosen alarm type with the recipe.

IGNORE	No alarm
WARNING	There is an alarm send to the user-interface. The control will continue with the next component.
ERROR	Equal to "Warning", but after the control sends an alarm, the machine does not start with the next component. The control will wait for a command. With "↵ Enter" the control will start with the next component and the alarm will be cancelled. By pressing the "stop" (distress button) twice the dispensing will be interrupted.

The overload alarm is dependent on the tare rate, which is indicated with the dispensing accuracy. Is the abnormality too big, so that it is outside the tare rate, only then will the overload alarm come into effect

3.7.3 Weight in kg / pound

In the user interface there is a choice between reflection the weight in Kilogram (Kg.) / gram (gr.) or in Pound (lb.) / ounce (oz).

1 kilogram = 2,205 pound	1 pound = 0,454 kilogram
100 gram = 3,53 ounce	1 ounce = 28,35 gram

3.7.4 Dispensing control

The dispensing control will check the dosed weight of a component during the dispensing. Is the required weight already reached within the calculated time, the dispensing control will close the valve, so that there will not be a large exceeding of the required weight.

Dispensing control

0	Dispensing control turned off
1	Dispensing control always turned on (To use when the material does not go very well, to avoid overload.)
2	Dispensing control only turned on during calibration (With vibrations of the machine, if it is on a drawn in opening for example, to avoid unnecessary empty reports.)

After the dispensing control has intervened, immediately there is a calculation of the dump rate on the basis of the last dispensing. Normally this is (4 x the old dump rate + the new dump rate) / 5. Last is used to avoid too much fluctuation.

3.8 Menu hierarchy

next>>
Production status
Material usage
Change recipe
Public parameters
Protected parameters
Date and time
Calibration-screen
- Calibrate
- Tare
- Hardware reaction time

next>>
Alarm history
Adjust contrast
Choose language
System
- Change recipe in status screen
- Overload alarm
- FGB-MINI unit
- Weight in kg / pound
- Dispensing control

Logout
Change password
<<previous

next>>
Revisie
I/O monitor
Choose manual / automatic control
Local / remote mode
<< previous

Reference to paragraph:

Production

Production status	§ 3.3.1
Material usage	§ 3.3.2
Weight in	§ 3.7.4

Control

Change recipe	§ 3.2.1
Public parameters	§ 3.5.1
Protected parameters	§ 3.5.2
Alarm history	§ 5
Calibration	§ 3.4
Weighcel	§ 3.4.1
Weighcel tare	§ 3.4.2
Hardware reaction time	§ 3.4.3
I/O Monitor	§ 3.4.5
Choose manual control	§ 3.4.6
Choose automatic control	§ 3.4.7
Overload alarm	§ 3.7.2
FGB-MINI unit	§ 3.7.3
Dispensing control	§ 3.7.4

Recipes

Enter recipes	§ 3.2
Change recipe in status screen	§ 3.7.1

Terminal

Login/logout	§ 3.6.1
Change ID code	§ 3.6.1.1
Date and time	§ 3.6.2
Revision	§ 3.6.3

Adjustments

Change recipe in status screen	§ 3.6.1
Overload alarm	§ 3.6.2
Dispensing control	§ 3.6.3
Local / remote	§ 2.2.1

4 INSTALLATION GRAVIMIX (Series FGB 1, 2, 5, 10 and 25)

4.1 Required connections

Before installation the following connections should be available:
- power supply 240V 50/60Hz (P+N+PE) and 400V 50/60Hz (3P+N+PE)
- clean and dry compressed air supply with a constant pressure; **minimum** 6 bar, 1/4" BSPconnection Figure 2.2

4.2 Installation

There are several ways to install the GRAVIMIX blender, for example;
- on a stand with integrated vacuum take-off box next to the processing machine (option)
- on a platform / frame above the processing machine
- directly on the processing machine

Before installation of the blender open or remove the front panel. At the same time remove the weighbin, mixing chamber and mixer.

To prevent the loadcells from damage during transport, the weighbin must be removed from the blender !

The frontpanel can be opened by turning the pawl latches. The weighbin can be removed after the quick release coupling air line is disconnected. The mixing chamber can be taken out by removing the star handles or by turning the pawl latches. The mixer blade (FGB 1, 2 and 5 series) can be removed by turning this in the direction of rotation (counter-clockwise) and pulling (bayonet coupling). The mixing chamber and mixer (FGB 10 and 25 series) can be removed completely. To reassemble reverse the process.

If the GRAVIMIX blender is provided with extra screw feeders at the back and/or the front side, then they should be removed before installation. The screw feeders can be removed from the mounting-pins as follows; disconnect the plug from the controlbox (draw. 2.2), open the toggle latches, remove the safety screw (draw. 2.3) and pull the complete screw feeder from the mounting-pins. The assembly takes place in the reverse way.

ATTENTION: **do not connect the power and compressed air before the GRAVIMIX blender is finally installed.**

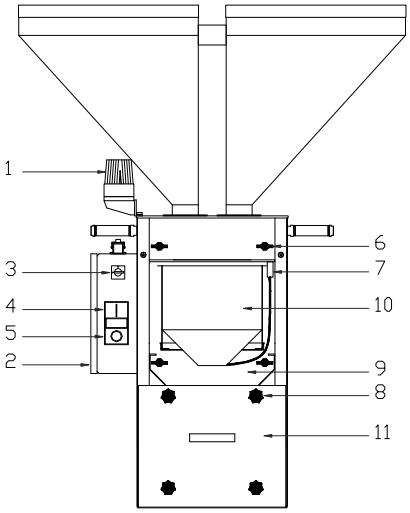

Figure 4.1 Frontview GRAVIMIX

1 – alarm lamp
2 - controlbox
3 – main switch
4 - control voltage (on)
5 - control voltage (off)
6 - pawl latches
7 - compressed air coupling
8 - star handles / pawl latches
9 - frontpanel
10 - weighbin
11 - mixing chamber

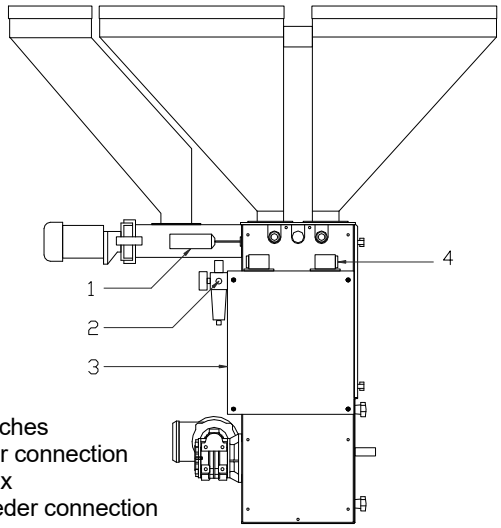

1 - toggle latches
2 - compr. air connection
3 - controlbox
4 - screw feeder connection

Figure 4.2 Sideview GRAVIMIX

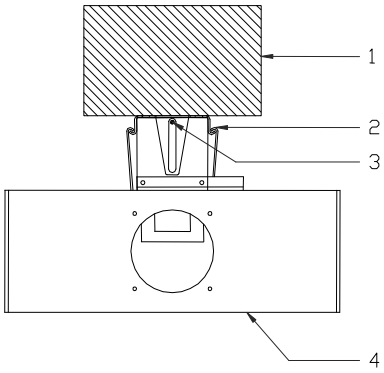

1 - blender
2 - toggle latches
3 - safety screw
4 - hopper

Figure 4.3 Extra screw feeder

4.3 INSTALLATION GRAVIMIX FGB-MINI (0.5 kg batch)

4.3.1 Required connections

Before installation the following connections should be available:
- power supply 240V 50/60Hz (P+N+PE)
- clean and dry compressed air supply with a constant pressure; **minimum** 6 bar, ¼" BSPconnection

4.3.2 Installation

The GRAVIMIX FGB-MINI (draw. 2.4) can be installed in several ways, for example:
- directly on the throat of a processing machine
- on a frame above the machinehopper of the processing machine

Before installation of the blender, open the frontpanel and remove the weighbin and mixing chamber.

<u>To prevent the loadcell from damage during transport, the weighbin has to be removed from the blender !</u>

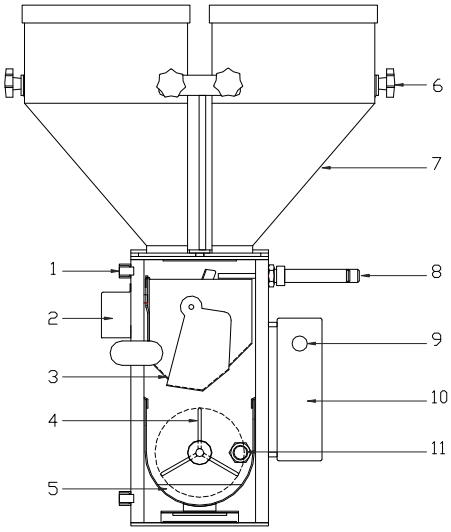

1 - toggle latches
2 - loadcell housing
3 - weighbin
4 - mixer
5 - mixing chamber
6 - star handles
7 - removable hoppers
8 - weighbin cylinder
9 - emergency stop
10 - connection box
11 - level sensor

Figure 4.4 Frontview FGB-MINI

The frontpanel can be opened by releasing the toggle latches. The weighbin can be simply removed from the suspension to the front. The mixing chamber with shut off valve can be removed completely to the front side of the blender.

The hoppers with dispensing-valve are removable and can be removed after the quick release lines are disconnected and the star handles are unscrewed. To reassemble reverse the operation.

ATTENTION: **do not connect the power and compressed air before the GRAVIMIX blender is completely installed.**

The GRAVIMX blender can be fixed by means of the mounting holes in the foot plate:
- on a frame with fixing plate and an integrated vacuum take-off box (option)
- on a platform on / or above the processing machine
- on a flange of the throat of a processing machine (if there is no such a flange or attachment present, there should be one designed in consultation with your supplier).

The mounting holes are positioned as mentioned in figure 2.5.

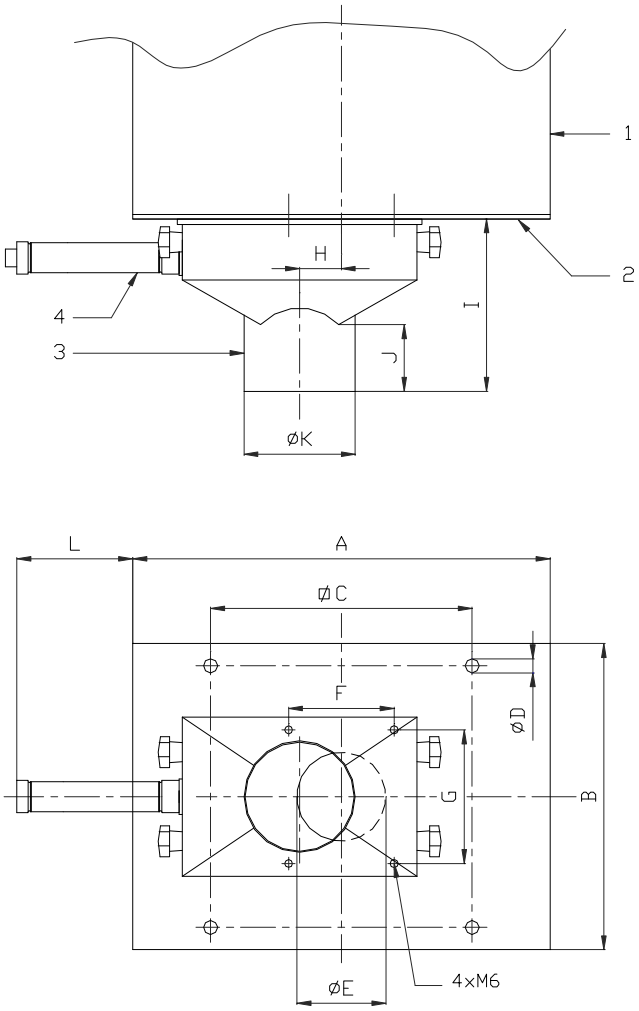

	FGB 0,5	FGB 1	FGB 2
A	170	275	375
B	167	275	275
C	120	185	235
D	9	10,5	10,5
E	50	50,5	80
F	n.v.t.	80	95
G	n.v.t.	60	120
H	n.v.t.	0	38
I	n.v.t.	130	155
J	n.v.t.	55	60
K	n.v.t.	78	100
L	n.v.t.	90	105

	FGB 5	FGB 10	FGB 25
A	375	495	650
B	275	455	650
C	235	340	480
D	10,5	12,5	12,5
E	80	125	2 x 110
F	95	120	120
G	120	120	
H	38	0	
I	155	175	175
J	60	40	40
K	100	124	2 x 124
L	105	170	

1 - blender
2 - foot plate
3 - material control valve
4 - pneum. cylinder

Figure 4.5 Foot plate & Material control valve

The GRAVIMIX blender should be installed as stable as possible, in connection with the accuracy of the loadcells.

If the blender is provided with a material control valve (underneath the mixing chamber), then this valve should be mounted under the footplate of the blender with 4 screws after the blender is installed. Then the pneumatic cylinder of the control valve should be connected to the redesignated pneumatic solenoid valve (for instruction see chapter 13.4).

After the blender is finally installed, the mixer, mixing chamber and weighbin can be replaced and the frontpanel can be closed. The compressed air supply can be connected to the pressure regulator (max. 12 bar). The power supply (240V and/or 400V) can be connected to the controlbox of the blender and/or to the separate user-interface. The power supply should be “clean” with regard to fluctuation and interference. Then the communication cable between the user-interface and the controlbox should be plugged in. It is **not** permitted to put this cable (particularly the RS-422 communication cable) in a cableway with high power (flux) cables, this is in connection with interference (induction).

Finally the raw material supply should be connected to the hoppers of the GRAVIMIX blender.

It is advisable, that the hopper loaders mounted on the GRAVIMIX, are provided with a good connection with earth (PE). This because of the static electricity generated by the transport of raw materials.

For start-up of the blender refer to chapter 2.

5 Alarms

The operating system sends a message to the terminal when a failure is detected. The message will be displayed and stored with date and time in the alarm history. Underneath is a list of all possible messages, with the solutions.

ALARMS		
Alarm-message	Description	Action to cancel alarm
Press recover	Alarm already cancelled Operator must confirm	Press recover
No control voltage	No 24V control voltage present	Turn on the main-switch or check fuses
Covers open	Security cover not present or mixerchamber removed	Place security-cover / mixer-chamber
Production weight reached	producedWeight equals produktionweight	Reset the producedWeight
No weighbin or calibrate	Zero weight of the weighbin is greater then 'maximumTareVariation'	Loadcell must be calibrated or a tare procedure must be done.
Parameters corrupted	The controller can't read his parameters correctly. All parameters will be filled with standard values.	Check the parameters *)
Data corrupted	The controller can't read the productiondata (production-screen). The data will be cleared.	Confirm *)
Hopper low	The hoppersensor (optional) indicates that a hopper runs out of material.	Fill hopper with material
Hopper empty	No material is dispensed so the controller indicates that a hopper must be empty.	Fill hopper with material and press the start-button.***)
Loadcell not calibrated	The controller can't read the loadcell parameters correctly.	Calibrate the weighbin
Loadcell overload	Weight of the weighbin is greater than the loadcellOverload parameter.	Remove material out of the weigbin.
Loadcell not stable	Weightsignal from the loadcell doesn't fit the band.	Press enter *) **)
Loadcell need more samples	Controller needs more samples to generate a stable weight.	Press enter *)
Loadcell boundary error	To much weight-samples doesn't fit the band.	Press enter *)
Silo high	Silo supply hopper is full for several batches. (High sensor is activated)	Counter will automaticaly cleared.
Regrind process par conflict	Given hoppernumbers doesn't contain regrind or percentage	Check the regrind control parameters
Additive regrind par conflict	Given hoppernumber doesn't contain additive	Check the AdditiveToRegind parameters

*) If this error occurs frequently contact your dealer

**) Other problems which initiate this error are:
- The weighbinDumpTime too short
- Weighbin valve touches the material when mixerchamber is full

When the second problem occurs the position of the mixerchamber-sensor must be set lower. This action affects the total production capacity of your system.

***) Through a too short dispense valve opening time, the machine could think that there is no material in the hopper. There are three possible reasons for this.
-1 dispense accuracy is too narrow
-2 dispense speed is too high
-3 number of dispense attempts is too low
solutions:
-1 increase dispense accuracy (§ 3.5.2)
-2 adjust speed in recipe (§ 3.2.1)
-3 increase number of attempts (§ 3.5.2)

An error message on the terminal must be confirmed by pressing the "↵"-key. The terminal stores all error messages these can be displayed by the menu *Miscellaneous / alarm history'*. This screen shows the last number of times the error occurred. The error-list can de cleared by pressing reset button and choose clear.

If your problems can not be solved by these directives, please contact your dealer.

6 MAINTENANCE AND REPAIR

ATTENTION: make sure, before maintenance or repair is carried out, the power is switched off *(by pulling out the plugs)* and the compressed air is shut off *(by disconnecting the air pressure).*

6.1 Maintenance

Everything is set right and tested in the factory, adjustments should be carried out only if one of the following is not working correctly.

Air pressure: Set air pressure to approximately 6 bar for the best results.
However, the blender will work with a lower air pressure (minimum 4 bar).

Level sensor: The level sensor should protrude into the mixing chamber for about 10 mm.
If it protrudes too far, it will detect the mixer blades. If it does not protrude far enough, it will detect the mounting plate itself and not the material. (The FGB-10 and FGB-25 are different)

Adjusting the sensor sensibility. In the sensor is a small screw, with this screw the sensibility can be adjust as follows:

step 1: fill the mixing chamber with material until the sensor is covered.
step 2: turn the screw counter-clockwise until the 'led' goes on (if the 'led' already is on, then turn clockwise until the 'led' goes off and proceed with step 4).
step 3: turn the screw clockwise until the 'led' goes off.
step 4: turn the screw another ¾ turn clockwise.
step 5: empty the mixing chamber and check to be sure the sensor does not detect the mixer blades.

Weighbin valve: The weighbin valve should close quietly. An airflow-regulating valve is mounted on the most left pneumatic valve. This can be adjusted by means of the screw on top of the valve. With the FGB-MINI the airflow-regulating valve on the cylinder of the weighbin.

6.2 Replacement of parts

6.2.1 Replacement of printed circuit

For the replacement of the printed circuit board of the controlbox the cover should be removed first. Unplug the connectors, which are attached to the printed circuit. Now unscrew all M3 screws and remove the circuit board. It is important to disconnect the connectors first and then unscrew the screws. Assemble the replacement circuit board in the reverse way. **It is wise to use a wristband with ground cord, which is connected with earth (PE). This because of the static electricity.**

IMPORTANT

When ordering spare parts always mention type- and serialnumber !
For partnumbers see list at the back of this manual.

6.3 Cleaning of the blender

The frequency of cleaning will depend on the number of times the raw material is changed.

For cleaning the blender the front panel, the weighbin, the mixing chamber and mixer should be removed (as described in chapter 2).

ATTENTION: **make sure, when cleaning is carried out, the power and compressed air are switched off.**

Clean the blender with a vacuum cleaner. Use safety-goggles when cleaning ! After cleaning the parts can be placed back in the reverse way.

6.4 Transportation of the GRAVIMIX blender

Before moving the blender the weighbin must be removed, to prevent the loadcells from being damaged, this can be done as described in the previous chapter. The blender can now be moved on a solid pallet.

7 TECHNICAL INFORMATION

7.1 General blender specifications

For general information and blender specifications we refer to the brochure at the back of this manual.

7.2 Safety measures

The GRAVIMIX blenders are protected by two safety devices, which are positioned on the front panel and the mixing chamber, if one of them is removed, the power will be cut-off and the blender stops.
Further some warning-stickers are placed on the motor(s), controlbox, user-interface and front panel.
Several warnings are mentioned the manual in order to work with the blender as safe as possible.

The blenders are provided with the following warning labels (diagram):

- **Danger high voltage**

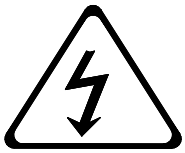

- **Caution rotating parts**

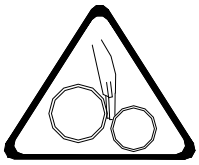

- **Direction of rotation motor(s)**

7.3 Electric connections and diagrams

For the electric connections of the blender, the controlbox and the user-interface we refer to the diagrams in this manual.
For the specification of the electric motor(s) we refer to the data on the motors.

7.4 Pneumatics

The blender is standard supplied with a filter-pressure regulator and a number of pneumatic solenoid valves. The number of valves is equal to the number of material hoppers plus one or two for the weighbin and if present one or two for the material control valve underneath the mixing chamber (option).

For connection of the pneumatic valves see figure 13.4 and 13.5
The valve of the weighbin is sealed at connection (W1) so only connection (W2) can be used, except in the serie FGB- MINI and FGB-25 there both connections are used.
The connection of the dispense valves H1, H2, H3 etc. are as following;

* H1-1 of the valve to C1 of the cylinder, also H2-1 of the valve to C1 of the cylinder etc.
* H1-2 of the valve to C2 of the cylinder, also H2-2 of the valve to C2 of the cylinder etc.

H1-1 and H1-2 should be connected to the cylinder of hopper number 1, H2-1 and H2-2 to the cylinder of hopper number 2 etc.
If a material control valve is used it should be connected to B1 en B2, one of the lines has a mark like one side of the cylinder, connect the corresponding marks.

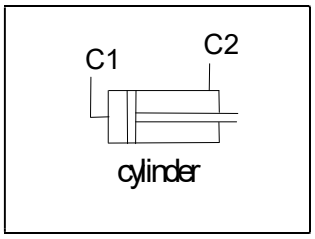

Figure 7.1

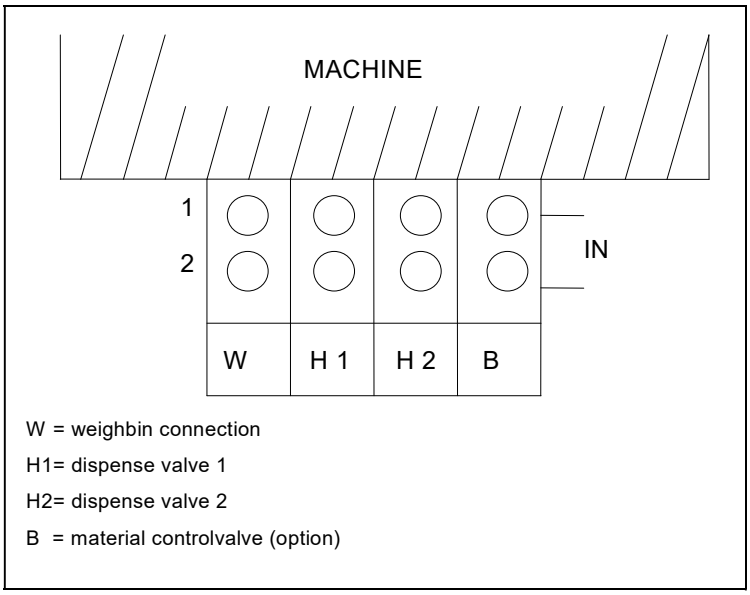

Figure 7.2 Topview pneumatic valves

Enclosures: electric diagrams